Customer Name:

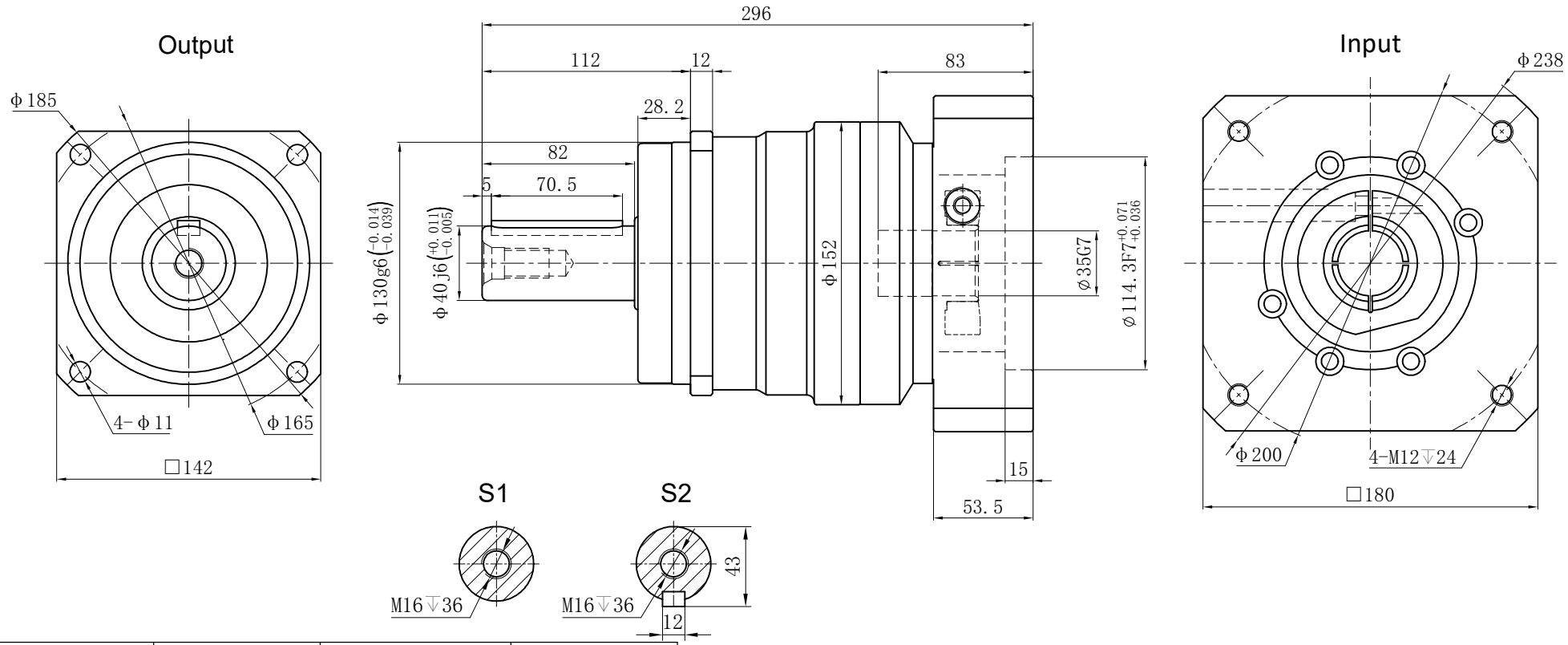

Transmission Ratio	(A):1	Mass Moments Of Inertia	(B)Kg.cm^2
Rated Output Torque	(C)Nm	Max Output Torque	(D)Nm
Rated Input Speed	3000rpm	Max Input Speed	6000rpm
Max Radial Force	14000N	Max Axial Force	11400N
Efficiency	≥ 97%	Operating Temperature	-20°~+90°
Mounting Position	Any	Lubrication Method	Synthetic grease
Weight ±3%	18Kg	Service Life	30000h
Standard Backlash	≤ 5 arcmin	Protection Class	IP65
Motor Power	- - KW	Noise Level	65dB
Motor Dimensions			

					Sign/Date					
							7	7.14	550	990
	4	7.54	542	975.5						
	5	7.42	650	1170			10	7.03	450	810
Ratio	A	B	C	D		Ratio	A	B	C	D

Note

Mark	No.	Sign	Date
	DRAW		
	CHEC		
	APPR		
	RULE		

Precision Planetary Reducer

GF140

GF140-L1

Shaft Type	Precision

Above specifications are for standard reducer and may be subject to change without notice.