Customer name：

Output

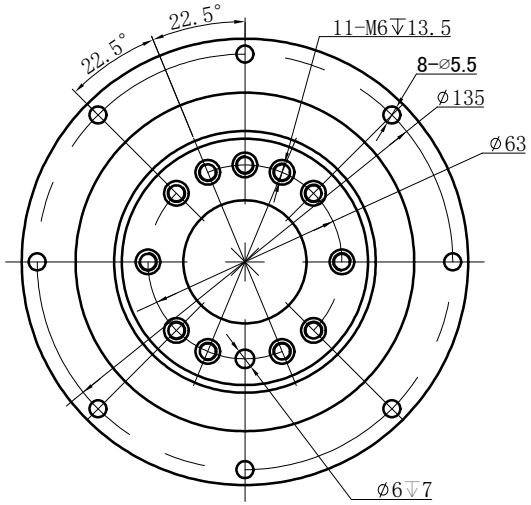


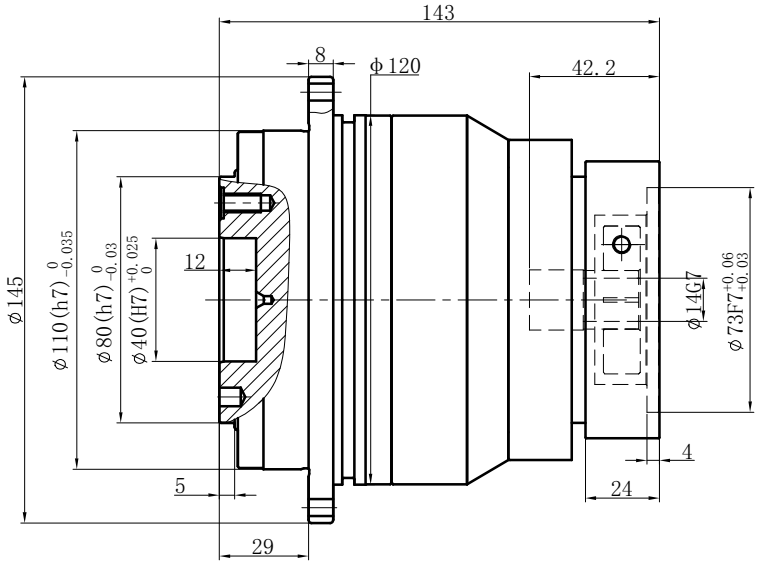


Input

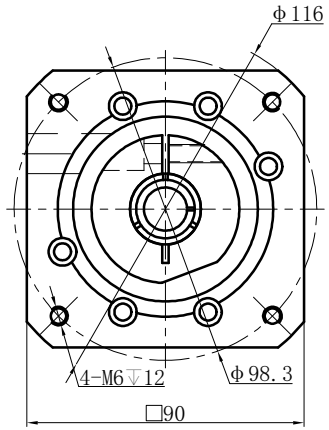


| | | | |
|---|---|---|---|
| Transmission ratio | ( A ):1 | Mass moments of inertia | ( B )Kg.cm$^2$ |
| Rated output torque | ( C )Nm | Max.Output torque | ( D )Nm |
| Rated input speed | 4000rpm | Max input speed | 8000rpm |
| Max Benging Moment | 430Nm | Max.axial force | 2990N |
| Efficiency | ≥ 94% | Operating temperature | -20°~+90° |
| Mounting position | Any | Lubrication method | Synthetic grease |
| Weight ±3% | 7.3Kg | Service life | 20000h |
| Standard backlash | ≤ 7 arcmin | Protection class | IP65 |
| Motor power | | Noise level | 60dB |
| Motor dimensions | | | |

| | | | | | | | | | | |
|---|---|---|---|---|---|---|---|---|---|---|
| | 40 | 0.47 | 270 | 486 | Sign/Date | | | | | |
| | 35 | 0.47 | 300 | 540 | | | 100 | 0.44 | 230 | 414 |
| | | | | | | | | | | |
| | 25 | 0.47 | 330 | 594 | | | 70 | 0.44 | 300 | 540 |
| | 20 | 0.47 | 270 | 486 | | | | | | |
| | | | | | | | 50 | 0.44 | 330 | 594 |
| Ratio | A | B | C | D | | Ratio | A | B | C | D |

NOTE

⌀19 to ⌀14

| Mark | No. | Sign | Date |
|---|---|---|---|
| | DRAW | | |
| | CHEC | | |
| | APPR | | |
| | RULE | | |

Precision Planetary Reducer

GD110

GD110-L2

| Shaft Type | Precision |
|---|---|
| | |