Customer Name:

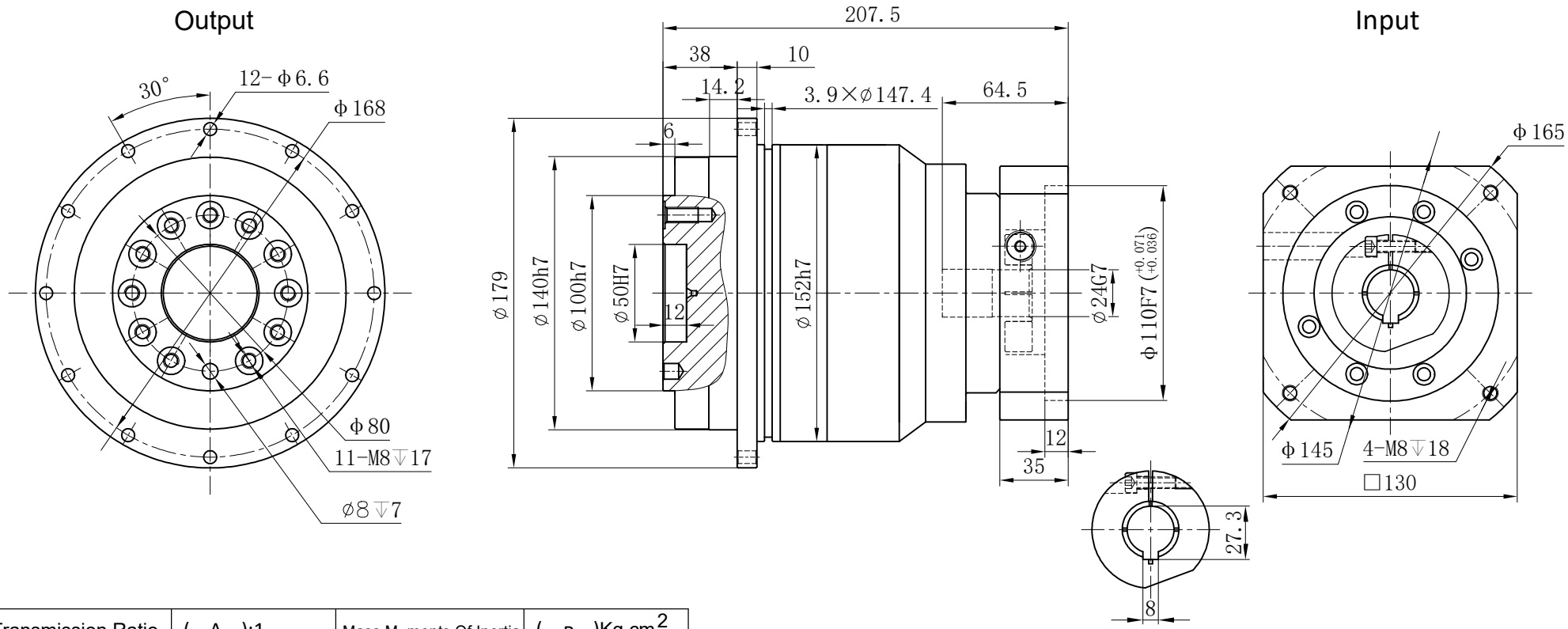

Transmission Ratio	(A):1	Mass Moments Of Inertia	(B)Kg.cm^2
Rated Output Torque	(C)Nm	Max Output Torque	(D)Nm
Rated Input Speed	3000rpm	Max Input Speed	6000rpm
Max Benging Moment	1300Nm	Max Axial Force	10590N
Efficiency	≥ 94%	Operating Temperature	-20°~+90°
Mounting Position	Any	Lubrication Method	Synthetic grease
Weight ±3%	15.9Kg	Service Life	30000h
Standard Backlash	≤ 7arcmin	Protection Class	IP65
Motor Power	- - KW	Noise Level	65dB
Motor Dimensions			

					Sign/Date					
	20	2.71	560	1008			100	2.57	450	810
	25	2.71	650	1170						
	35	2.71	550	990						
	40	2.71	560	1008						
	50	2.57	650	1170						
	70	2.57	550	990						
Ratio	A	B	C	D		Ratio	A	B	C	D

Note

Mark	No.	Sign	Date
	DRAW		
	CHEC		
	APPR		
	RULE		

Precision Planetary Reducer

GD140

GD140-L2

Shaft Type	Precision

Above specifications are for standard reducer and may be subject to change without notice.