Customer name:

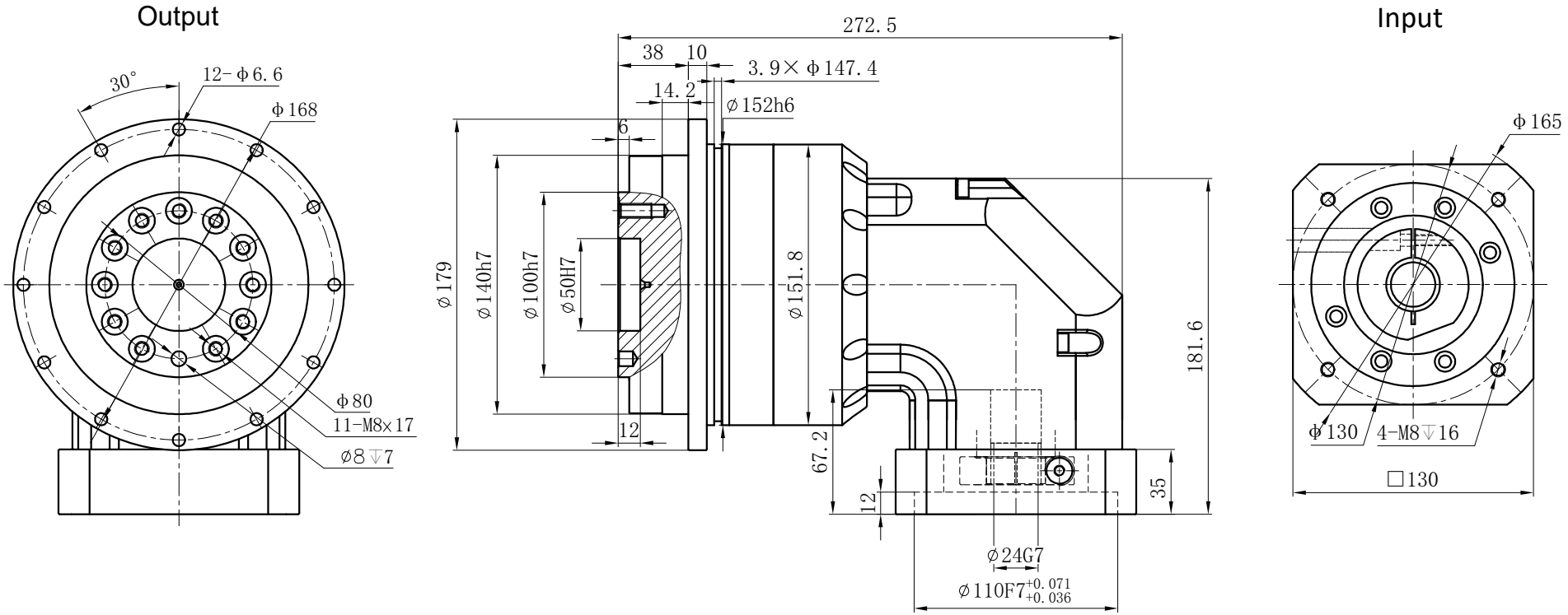

Transmission ratio	(A):1	Mass moments of inertia	(B)Kg.cm^2
Rated output torque	(C)Nm	Max.output torque	(D)Nm
Rated input speed	3000rpm	Max input speed	6000rpm
Max.Bending Moment	1300Nm	Max.Axial Force	10590N
Efficiency	≥ 92%	Operating temperature	-20°~+90°
Mounting position	Any	Lubrication method	Synthetic grease
Weight ±3%	20.1Kg	Service life	30000h
Standard backlash	≤ 7 arcmin	Protection class	IP65
Motor power	- - KW	Noise level	70dB
Motor dimensions			

The reducer uses this motor overload

Ratio	A	B	C	D
	25	6.84	650	1170
	35	6.84	550	990
	40	6.84	560	1008
	50	6.84	650	1170
	70	6.84	550	990
	100	6.84	450	810

Sign/Date

Ratio	A	B	C	D

Note

Mark	No.	Sign	Date
	DRAW		
	CHEC		
	APPR		
	RULE		

Precision planetary reducer

GDR140

GDR140-L2

Shaft Type	Precision

Above specifications are for standard reducer and may be subject to change without notice.