Customer name:

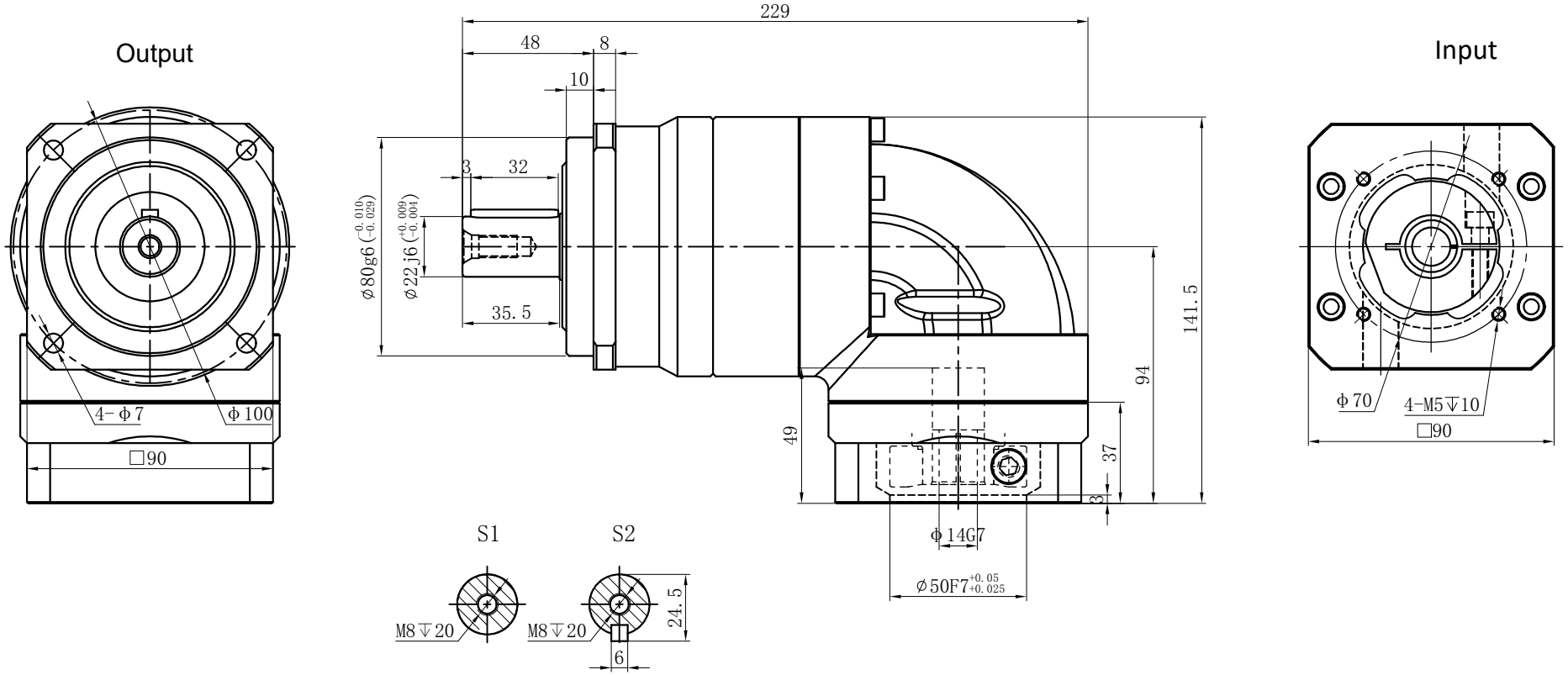

Transmission ratio	(A):1	Mass moments of inertia	(B)Kg.cm^2
Rated output torque	(C)Nm	Max.output torque	(D)Nm
Rated input speed	4000rpm	Max input speed	8000rpm
Max.radial force	3250N	Max.axial force	1625N
Efficiency	≥ 92%	Operating temperature	-20°~+90°
Mounting position	Any	Lubrication method	Synthetic grease
Weight ±3%	--Kg	Service life	20000h
Standard backlash	≤ 9 arcmin	Protection class	IP65
Motor power		Noise level	65dB
Motor dimensions			

Ratio	A	B	C	D
	60	0.35	150	270
	50	0.35	100	180
	40	0.35	120	210
	35	0.35	140	250
	30	0.35	150	270
	25	0.35	150	270

Sign/Date

Ratio	A	B	C	D
	200	0.31	100	180
	160	0.31	120	210
	140	0.31	140	250
	120	0.31	150	270
	100	0.35	100	180
	80	0.35	120	210
	70	0.35	140	250

Note

ø19-ø14

Mark	No.	Sign	Date
DRAW			
CHEC			
APPR			
RULE			

Precision planetary reducer

GCBR090

GCBR090-L2

Shaft Type	Precision

Above specifications are for standard reducer and may be subject to change without notice.