Customer name:

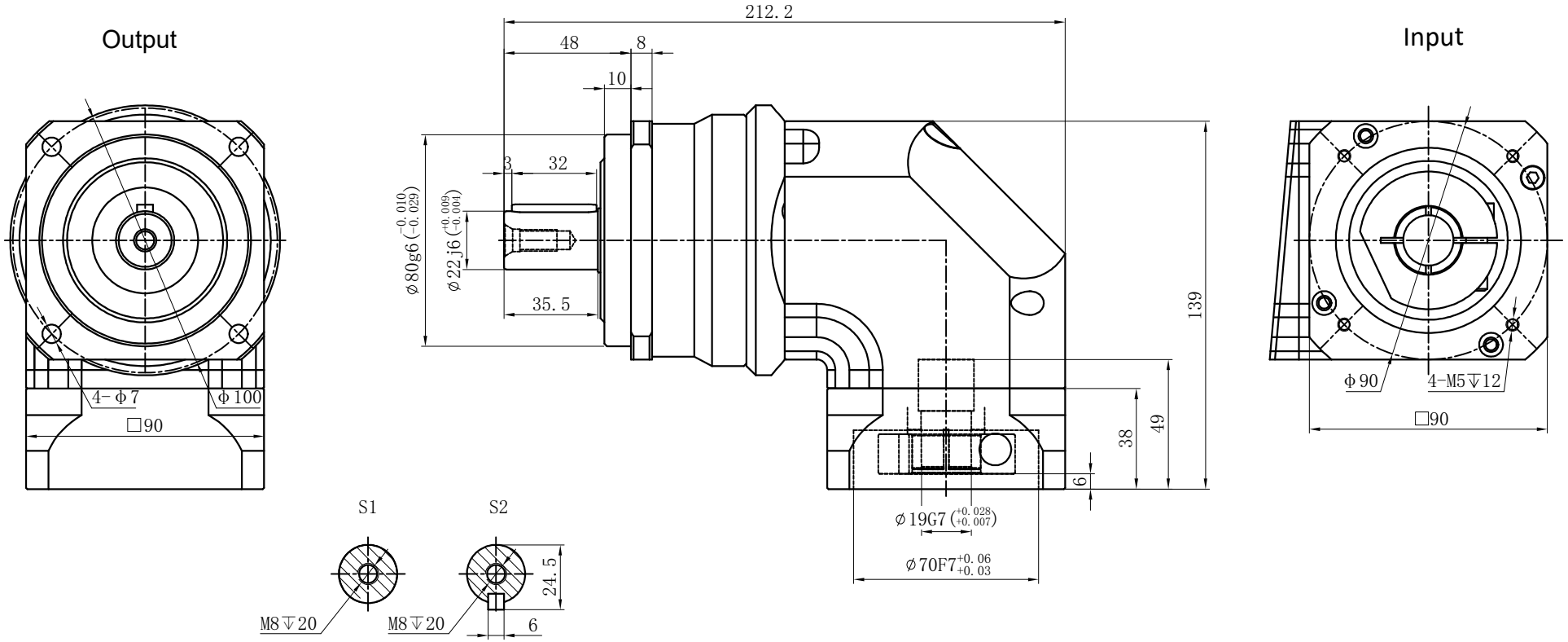


| | | | |
|---|---|---|---|
| Transmission ratio | ( A ):1 | Mass moments of inertia | ( B )Kg.cm$^2$ |
| Rated output torque | ( C )Nm | Max.output torque | ( D )Nm |
| Rated input speed | 3000rpm | Max input speed | 6000rpm |
| Max.radial force | 3250N | Max.axial force | 1625N |
| Efficiency | ≥ 95% | Operating temperature | -20°~+90° |
| Mounting position | Any | Lubrication method | Synthetic grease |
| Weight ±3% | 6.4Kg | Service life | 20000h |
| Standard backlash | ≤ 6 arcmin | Protection class | IP65 |
| Motor power | | Noise level | 67dB |
| Motor dimensions | | | |

Sign/Date

| Ratio | A | B | C | D |
|---|---|---|---|---|
| | 10 | 2.25 | 97 | 180 |
| | 7 | 2.25 | 135 | 252 |
| | 5 | 2.25 | 140 | 270 |
| | 4 | 2.25 | 115 | 252 |

| Ratio | A | B | C | D |
|---|---|---|---|---|
| | 8 | 2.25 | 115 | 216 |
| | 6 | 2.25 | 140 | 270 |

Note

| Mark | No. | Sign | Date |
|---|---|---|---|
| | DRAW | | |
| | CHEC | | |
| | APPR | | |
| | RULE | | |

Precision planetary reducer

GCBR090

GCBR090-L1

| Shaft Type | Precision |
|---|---|
| | |