Customer name:

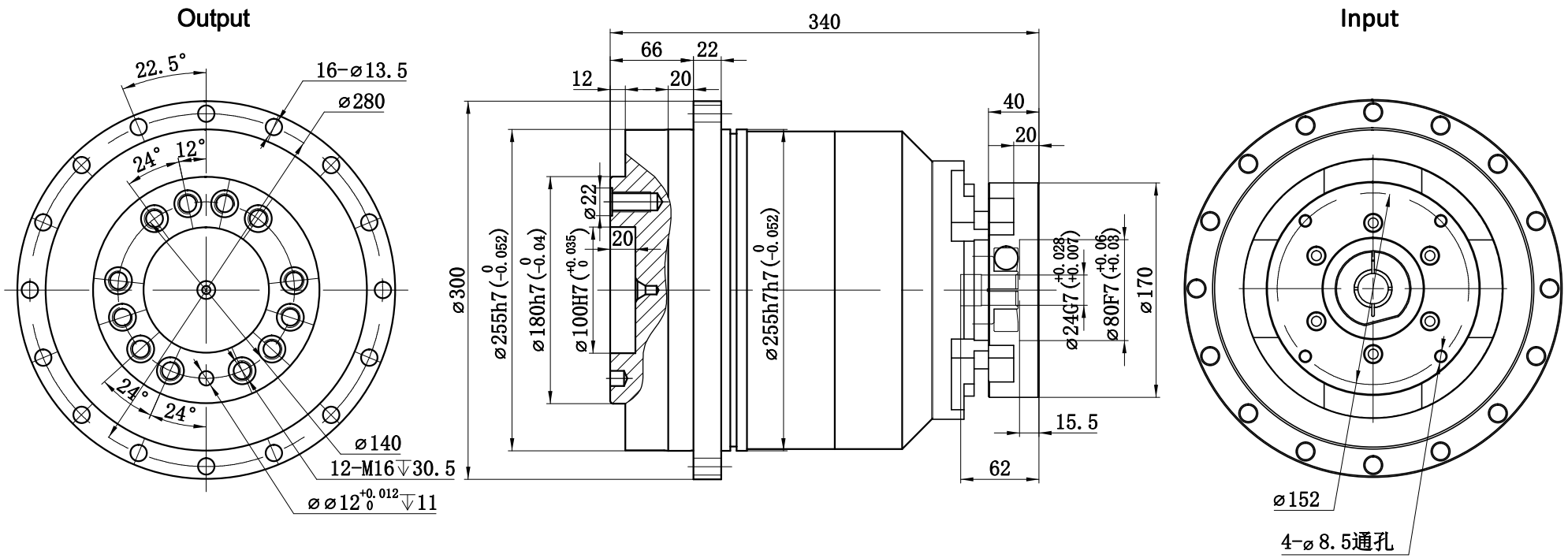

Transmission ratio	(A):1	Mass moments of inertia	(B)Kg.cm^2
Rated output torque	(C)Nm	Max.output torque	(D)Nm
Rated input speed	2000rpm	Max input speed	4000rpm
Max Bending Moment	5900NM	Max.axial force	29430N
Efficiency	≥ 94%	Operating temperature	-20°~+90°
Mounting position	Any	Lubrication method	Synthetic grease
Weight ±3%	-Kg	Service life	20000h
Standard backlash	≤ 7 arcmin	Protection class	IP65
Motor power		Noise level	68dB
Motor dimensions			

	25	23.29	2000	3600	Sign/Date
	35	23.29	1800	3240	
	50	22.51	2000	3600	
	70	22.51	1800	3240	
	100	22.51	1500	2700	
Ratio	A	B	C	D	

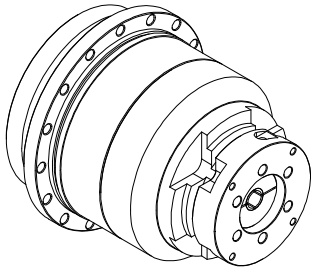

Note

Ø35-Ø32

Mark	No.	Sign	Date
	DRAW		
	CHEC		
	APPR		
	RULE		

Precision planetary reducer

GD255

GEARKO®

GD255-L2

Shaft Type	Precision

Above specifications are for standard reducer and may be subject to change without notice.