Customer Name:

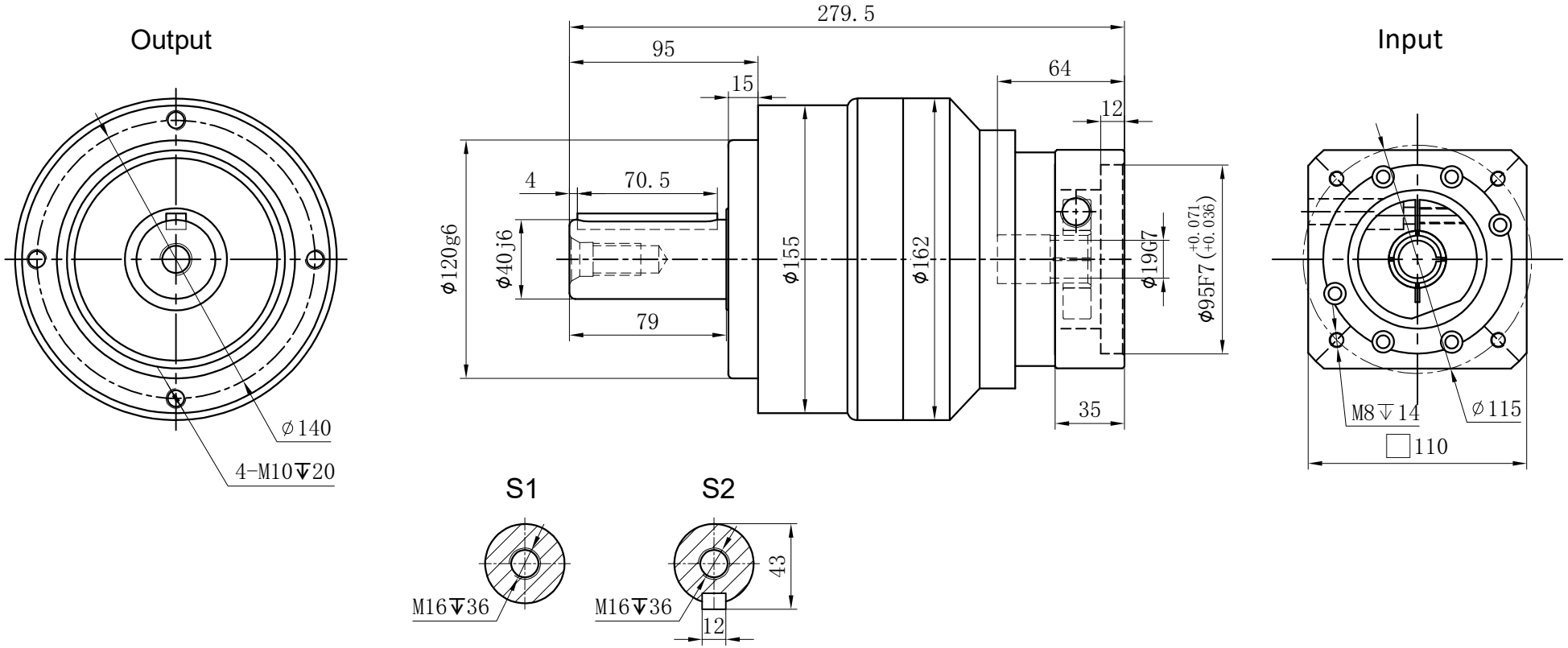

Transmission ratio	(A):1	Mass moments of inertia	(B)Kg.cm^2
Rated output torque	(C)Nm	Max.output torque	(D)Nm
Rated input speed	3000rpm	Max input speed	6000rpm
Max.radial force	8460N	Max.axial force	4700N
Efficiency	≥ 94%	Operating temperature	-20°~+90°
Mounting position	Any	Lubrication method	Synthetic grease
Weight ±3%	17Kg	Service life	20000h
Standard backlash	≤ 7 arcmin	Protection class	IP65
Motor power	- - KW	Noise level	65dB
Motor dimensions	MSMD082G1		

Ratio	A	B	C	D
	40	2.71	500	900
	35	2.71	550	990
	30	2.71	600	1080
	25	2.71	650	1170
	20	2.71	542	975
	15	2.71	342	615

Sign/Date

Ratio	A	B	C	D
	100	2.57	450	810
	80	2.57	500	900
	70	2.57	550	990
	60	2.57	600	1080
	50	2.57	650	1170

Note

φ24 to φ19

Mark	No.	Sign	Date
	DRAW		
	CHEC		
	APPR		
	RULE		

Precision planetary reducer

GE155

GE155-L2

Shaft Type	Precision