Customer name:

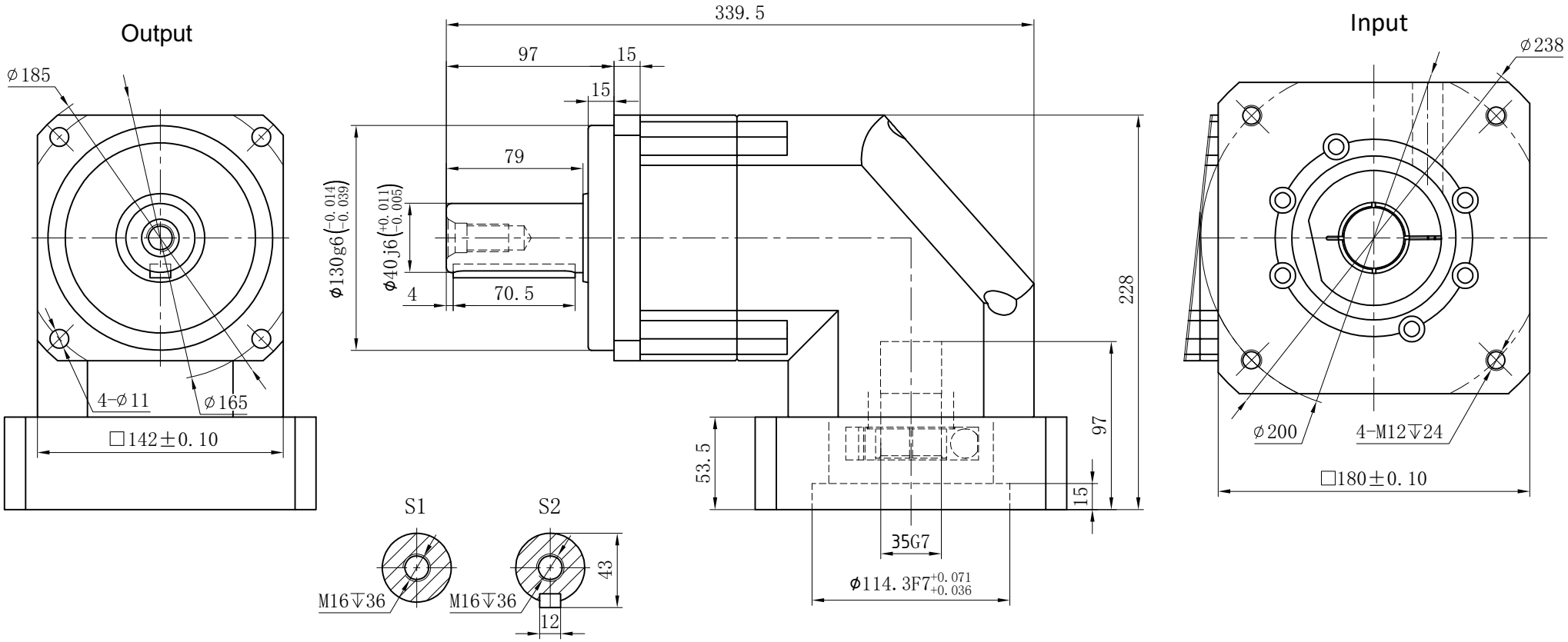

Transmission ratio	(A):1	Mass moments of inertia	(B)Kg.cm^2
Rated output torque	(C)Nm	Max.output torque	(D)Nm
Rated input speed	3000rpm	Max input speed	6000rpm
Max.Radial Force	9400N	Max.Axial Force	4700N
Efficiency	≥ 95%	Operating temperature	-20°~+90°
Mounting position	Any	Lubrication method	Synthetic grease
Weight ±3%	25.2Kg	Service life	20000h
Standard backlash	≤ 6 arcmin	Protection class	IP65
Motor power	- - KW	Noise level	70dB
Motor dimensions			

Ratio	A	B	C	D
	3	23.4	342	615
	4	23.4	520	936
	5	23.4	650	1170
	6	23.4	600	1080
	7	23.4	550	990
	8	23.4	500	900

Sign/Date

Ratio	A	B	C	D
	10	23.4	450	810
	12	21.8	600	1080
	14	21.8	550	990
	16	21.8	500	900
	20	21.8	450	810

Note

Mark	No.	Sign	Date
	DRAW		
	CHEC		
	APPR		
	RULE		

Precision planetary reducer

GBR142

GBR142-L1

Shaft Type	Precision

Above specifications are for standard reducer and may be subject to change without notice.